LINOVISION

POE-SWR608G-Solar

Industrial 8 Ports Full Gigabit PoE Switch

Outstanding Features

- **SOLAR PoE SWITCH:** Support DC 12~57V voltage input, featuring built-in voltage booster, works directly with DC 12V or DC 24V solar battery systems, and outputs standard 48V PoE for regular PoE cameras.
- **10 FULL GIGABIT PORTS:** 2x 2.5G SFP ports, 6x IEEE802.3af/at PoE Ports and 2x 45W High PoE+ Ports.
- **45W HIGH PoE+ OUTPUT:** Optimized for big PTZ cameras, such as multiple-lens PTZ cameras, high speed dome cameras, cameras with big white LED light.
- **REMOTELY CLOUD MANAGED:** via WEB GUI or RemoteMonit CLOUD. It supports VLAN, QOS and PoE port management, including PoE On/Off control, Power budget, priority, etc.
- **TOTAL PoE BUDGET:** 180W (DC24V/48V input) or 70W (DC12V input).
- **REDUNDANT POWER INPUT:** Support 2 channel DC 12 ~ 57V independent power inputs, ensure high reliability networking system.
- **INDUSTRIAL DESIGN:** Support DIN rail mount and Wall mount. Wide working temperature (-20℃ ~ 60 ℃ or -4℉~140 ℉) and 4KV surge protection.

LINOVISION

Interface

Front View

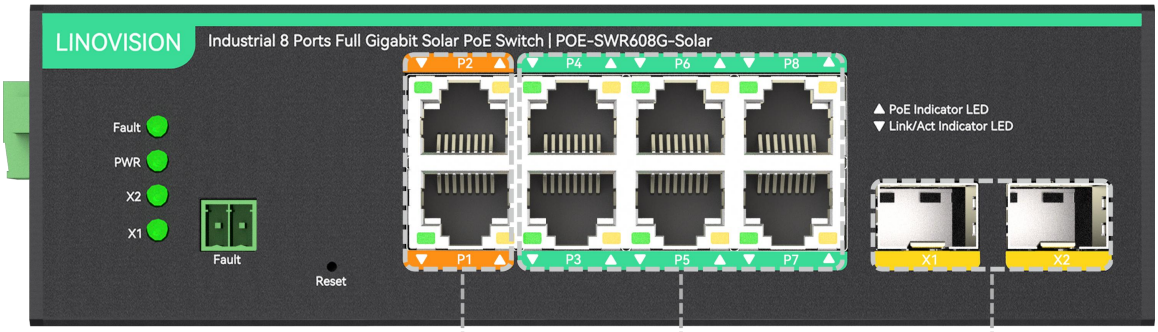

2 * Gigabit 45W High PoE+ Ports

6 * Gigabit PoE Ports

2 * 2.5G SFP Ports

Side View

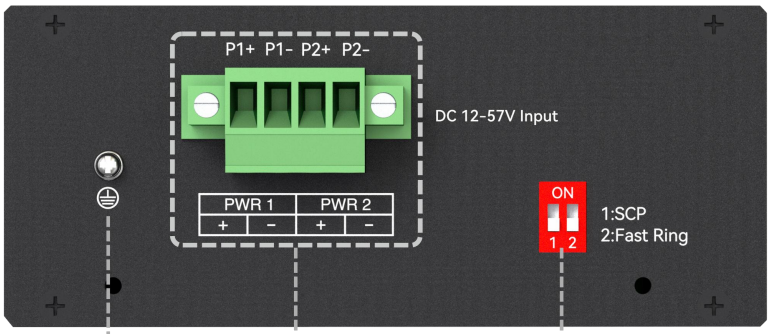

Grounding

Dual DC 12~57V Independent Power Inputs

DIP Switch 1: SCP (Broadcast storm suppression)
DIP Switch 2: Fast Ring

Disclaimer: Technical specifications may subject to change without prior notice

LINOVISION

Connection Diagram

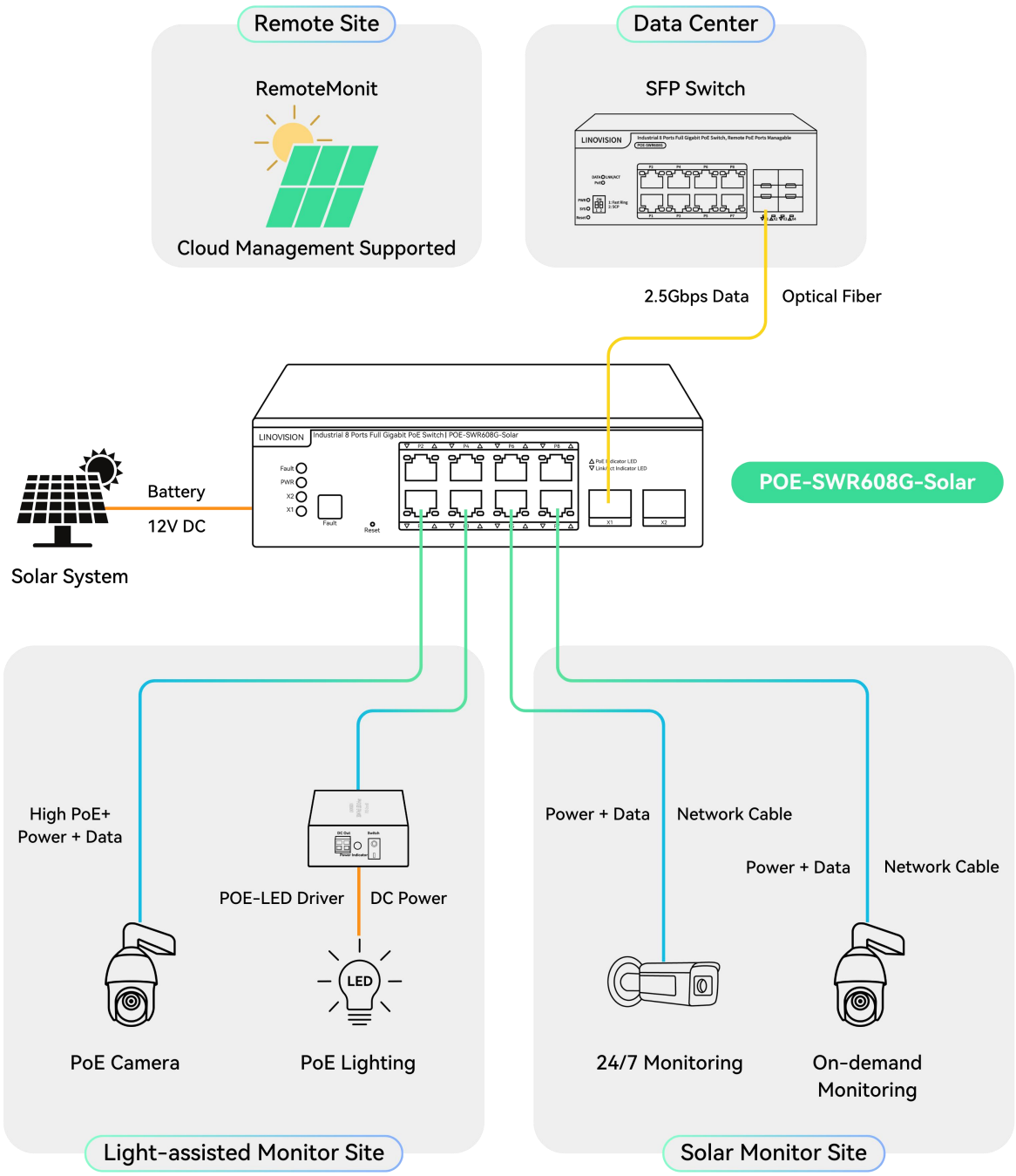

Disclaimer: Technical specifications may subject to change without prior notice

LINOVISION

Dimension

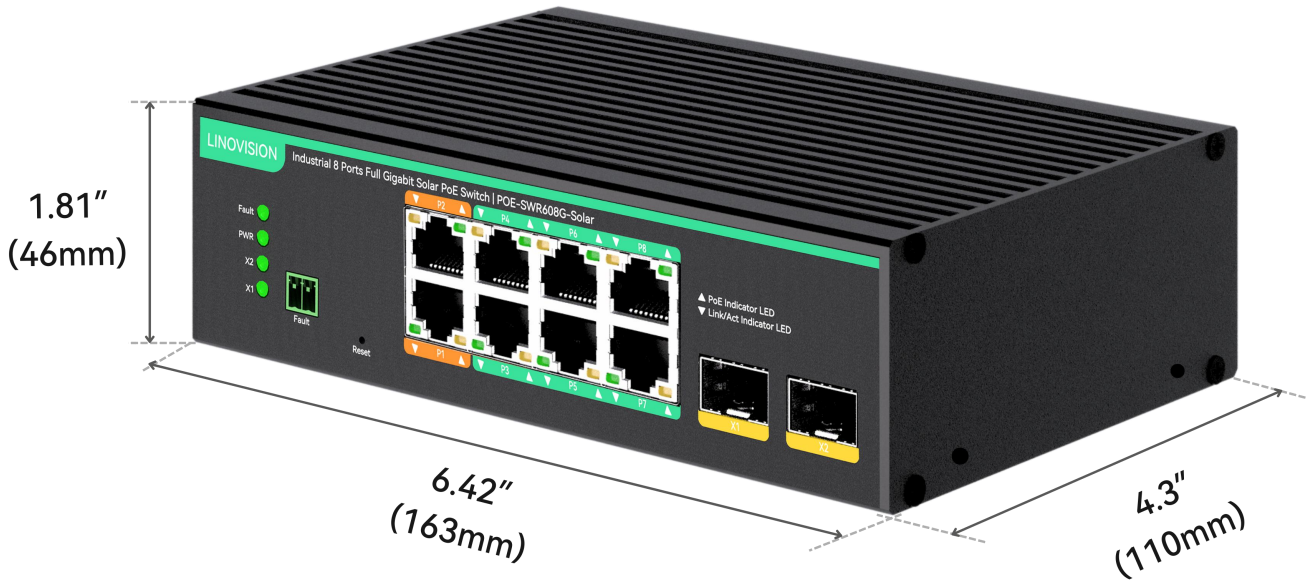

Weight: 950g (2.09 lb)

Installation

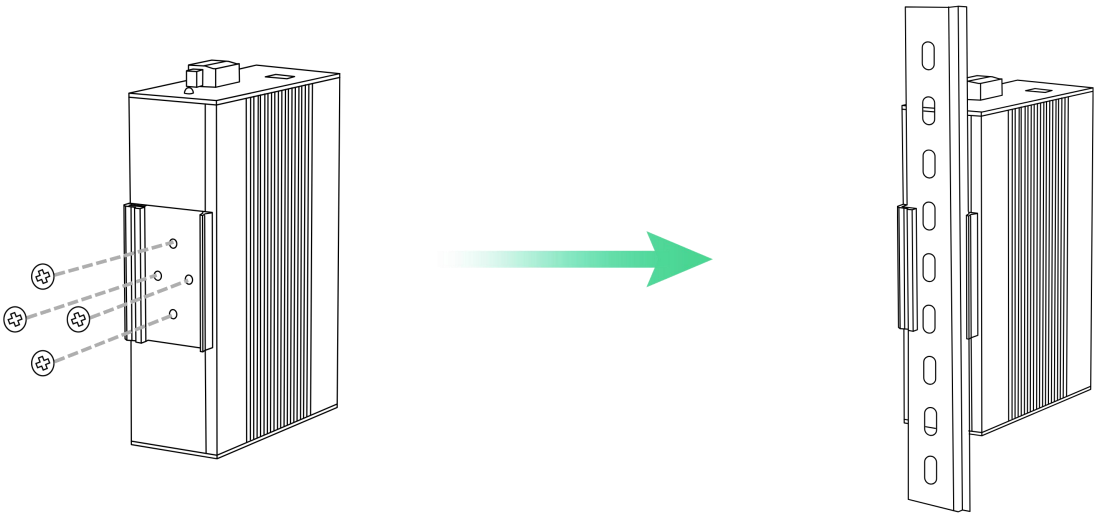

DIN-Rail Mounting

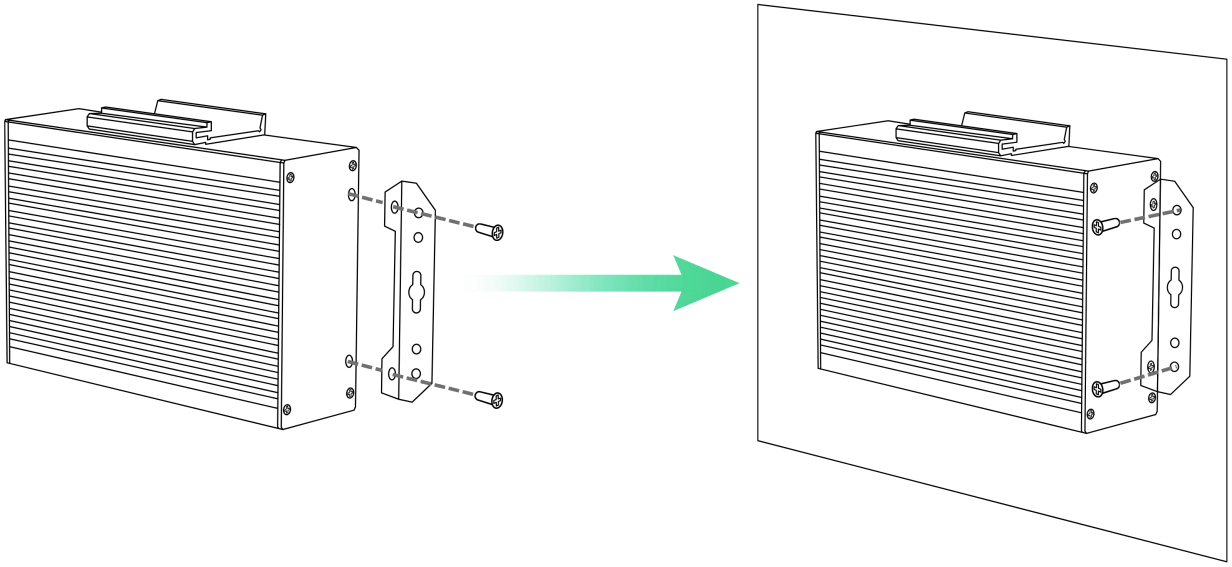

Wall Mounting

LINOVISION

Package

POE-SWR608G-Solar

Din Rail Mount Accessory

Wall Mount Accessory

Terminal

User Manual

LINOVISION

Specification

Interface	8×10/100/1000Mbps RJ45 Ports 2×2.5Gbps SFP Ports
Standard	IEEE802.3, IEEE802.3u, IEEE802.3ab, IEEE802.3z, IEEE802.3x, IEEE802.1x, IEEE802.1q, IEEE802.1p, IEEE802.1d, IEEE802.1w, IEEE802.3ad, IEEE802.3af, IEEE802.3at
Network Media (Cable)	10BASE-T: UTP category 3,4,5 cable (≤100 m)100BASE-TX: UTP category 5,5e cable (≤100 m)1000BASE-X: UTP category 5e,6 cable (≤100 m)1000BASE-X: MMF, SMF
PoE Standard	IEEE802.3af/at
PoE Port	Port1–8
PoE Output	Port 1-2: 45W (Max) Port 3-8: 30W (Max)
PoE Power On RJ45	1/2 (+), 3/6 (–)
PoE Power Budget	70W @ 12V 180W @ 24V/48V
Total power supply (reference)	200W
Input voltage	DC 12–57V
MAC Address Table	16K, Auto-learning, Auto-update
Jumbo Frame	12KByte
Buffer	8.4Mbit
Transfer Mode	Store-and-forward
Packet Forward Speed	19.34Mbps
Switching Capacity	26Gbps
Dimensions (L×W×H)	163×110×46mm (6.42"×4.3"×1.81")
Operating Temperature	-20°C ~ 60°C (-4°F ~ 140°F)
Storage Temperature	-40°C ~ 80°C (-40°F ~ 176°F)
Operating Humidity	10% ~ 90% non-condensing
Storage Humidity	5% ~ 90% non-condensing
Surge Protection	Differential mode ±2 KV, Common mode ±4 KV
Electrostatic Standard	Contact ±6 KV, Air ±8 KV

**Disclaimer: Technical specifications may subject to change without prior notice*

Function menu	Functional description	Added
Function menu	Login authentication and logout	
	Bilingual (Chinese-English Switching)	
	Port Panel (two colors distinguish speed)	1000M green 100M/10M orange-yellow
System Settings	Device Info	Hostname / Device Contact / Device Location
	IP Settings	Static / DHCP Client / DNS
	Web Settings	Web timeout settings
	Telnet Settings	Support telnet enabled/disabled Support telnet timeout setting
	User Management	Password must contain at least letters & numbers, length ≥ 6
	Upgrade	Local Upgrade
	Device Management	Reboot / Save Configure / Restore
Monitoring	Port Statistics	Reboot / Save Configure / Restore
	Cable Diagnostics	Reboot / Save Configure / Restore
	Loop Guard	rlpp
	IGMP Snooping	Flood/Drop / DIP Mode
Switch Settings	Port Settings	Status Speed / Duplex / Flow Control
	Port Mirroring	In/Out/All
	Port Isolation	
	Jumbo Frame	Support 1522–10000 Bytes
	Green Enable	
	Static MAC	
	Filter MAC	
	Search MAC	
	MAC List	Classified display static/dynamic MAC address
	DHCP Snooping	

Function menu	Functional description	Added
Switch Settings	VLAN Member	
	VLAN Settings	Access, Trunk
QoS Settings	Port Rate	
	Storm Control	
	QoS Priority Mapping	Support CoS and DSCP priority mapping
	QoS Queue Scheduling	Support 8 queue, SP and WRR Queue Scheduling
PoE Settings	PoE Basic Settings	Support enabled/disabled PoE port Force Power PoE Port Limit PD Alive
Cloud Settings	Cloud Settings	MQTT